Power & Mobility (P&M)

GVSETS GROUND VEHICLE SYSTEMS ENGINEERING & TECHNOLOGY SYMPOSIUM
& ADVANCED PLANNING BRIEFING FOR INDUSTRY

NDIA Michigan

DEVELOPMENT OF A MODULAR AND SCALABLE HYBRID ELECTRIC CROSS DRIVE TRANSMISSION

Franco Caldarella, Andrew Johnson, Grant Wright, Ron Scheper

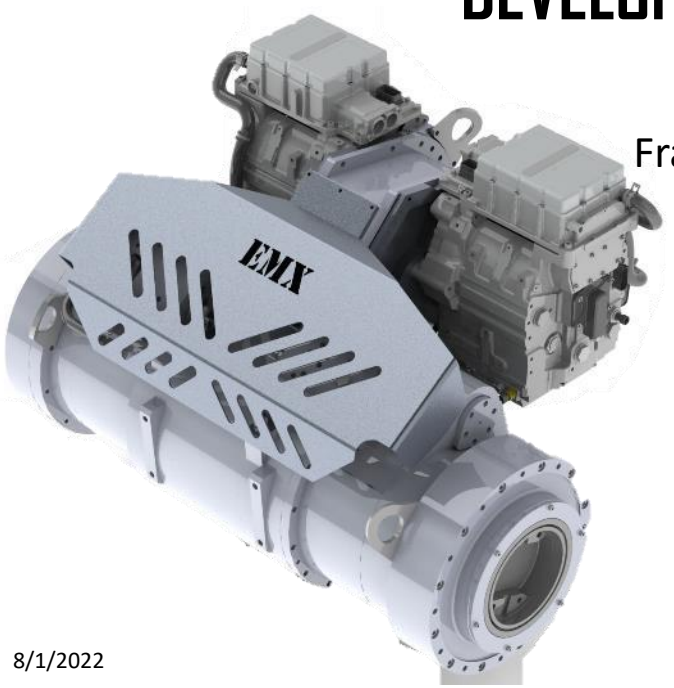

KINETICS
Drive Solutions

EMX Concept

Key design features of the EMX system:

- Modular, scalable architecture from 10-60+ tons to suit RCV-M, RCV-H, OMFV and beyond
- Fully integrated drive unit with Drive-By-Wire and Remote/Autonomous capability
- Regenerative cross-drive steering

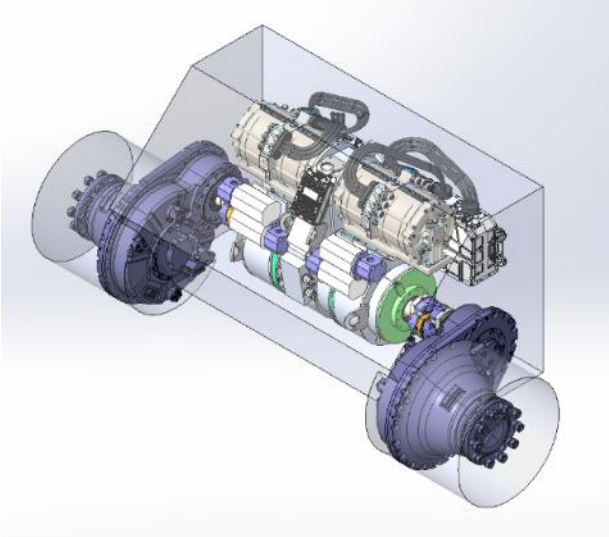

Vehicle Power Architecture

Capable of generator-only operation with battery offline

Capable of battery-only "silent" operation

Export power for combat systems or accessories

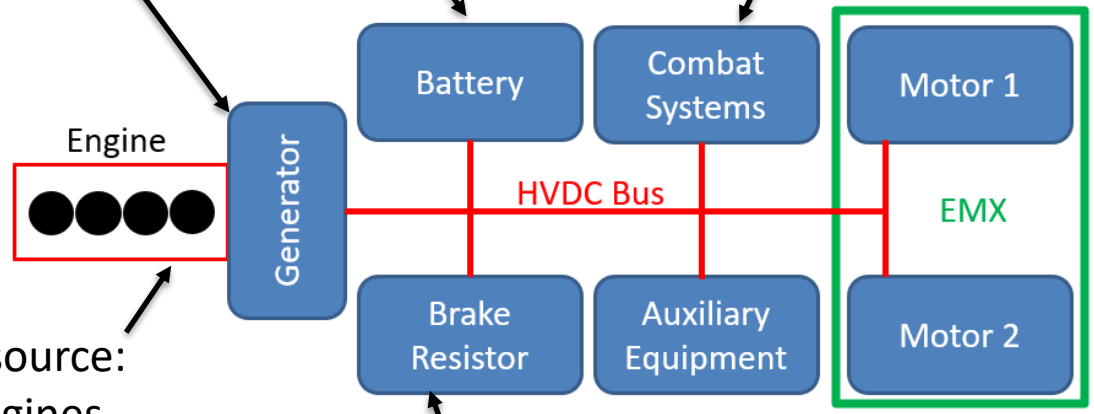

Flexible power source:

- Advanced engines
- Extended batteries
- Fuel cells
- Turbines

Optional braking resistor

EMX Gearing Architecture

Both propulsion motors share drive and steering loads

Differential lock for high breakout torque and limp-home mobility

Motors permanently connected to steering: no interruption

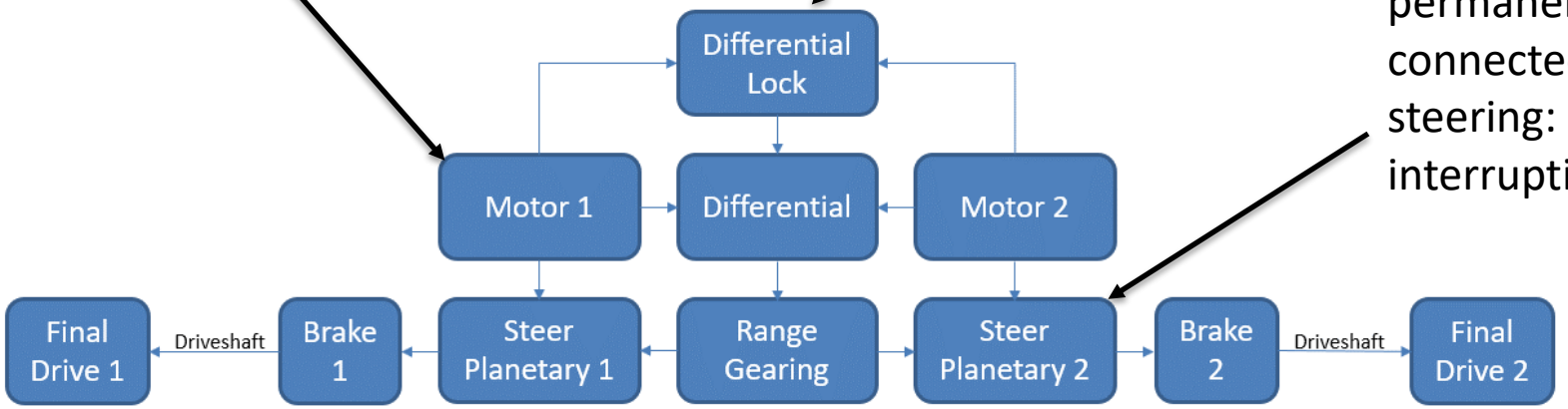

EMX Features

Full drive-by-wire:
- For remote or autonomous

Optional integrated final drives:
- Added value

PCM: Powertrain Control Module with redundant controllers:
- Safety and reliability

Patent pending gearing architecture:
- Exclusivity

Modular and scalable:
- Flexibility

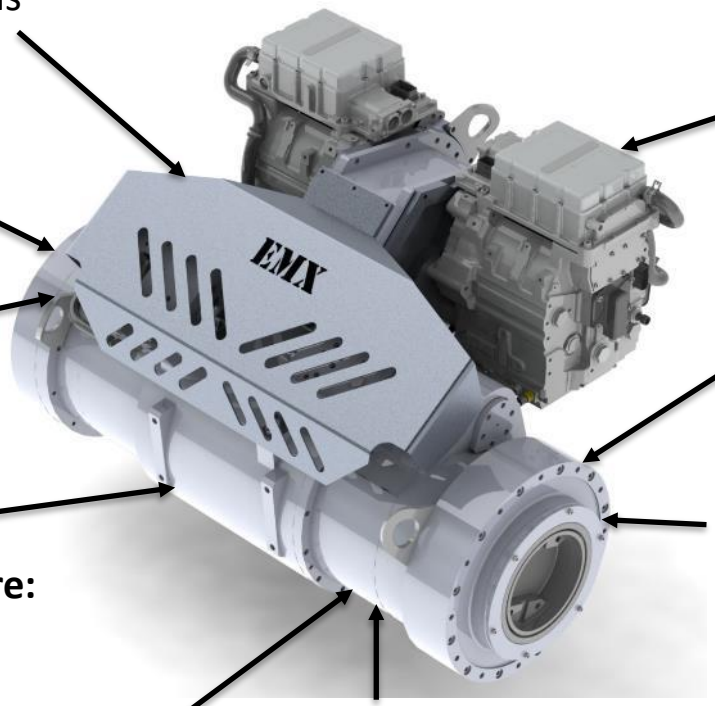

Motor agnostic Architecture:
- Flexibility

Redundant service brake valves:
- Safety and reliability

Separate spring applied park brake:
- Safety and reliability

Regenerative cross-drive steering:
- Efficiency and performance

Modular and Scalable

"Core" assembly shared between multiple variants

Easily adaptable to different motors

Modular brake assemblies to suit different applications

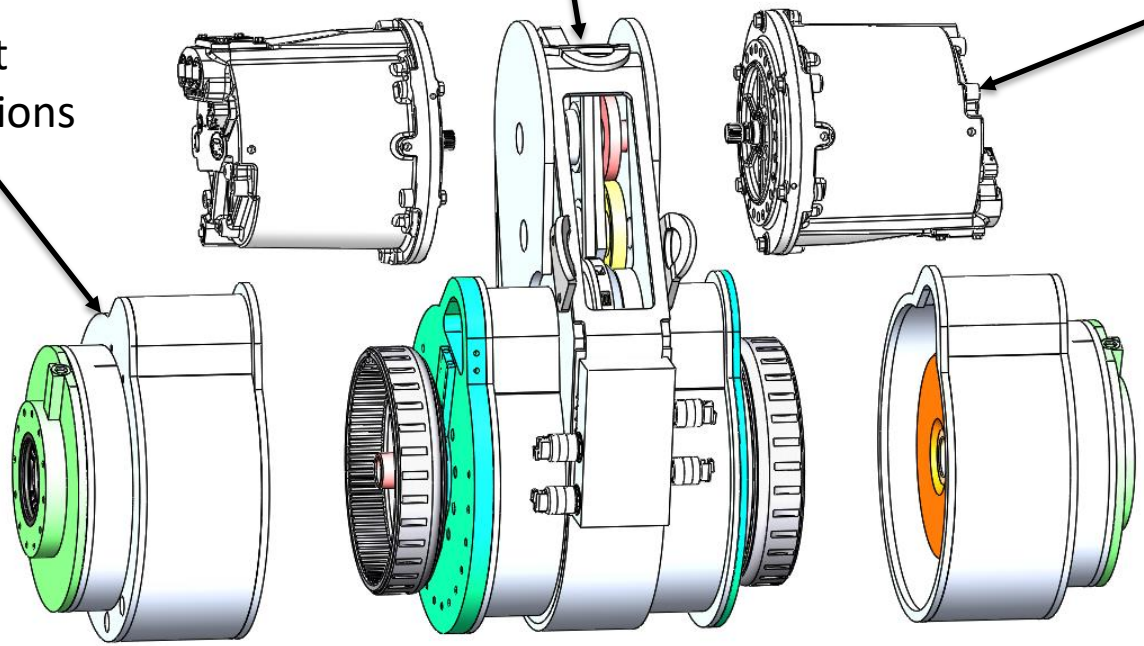

Control Structure

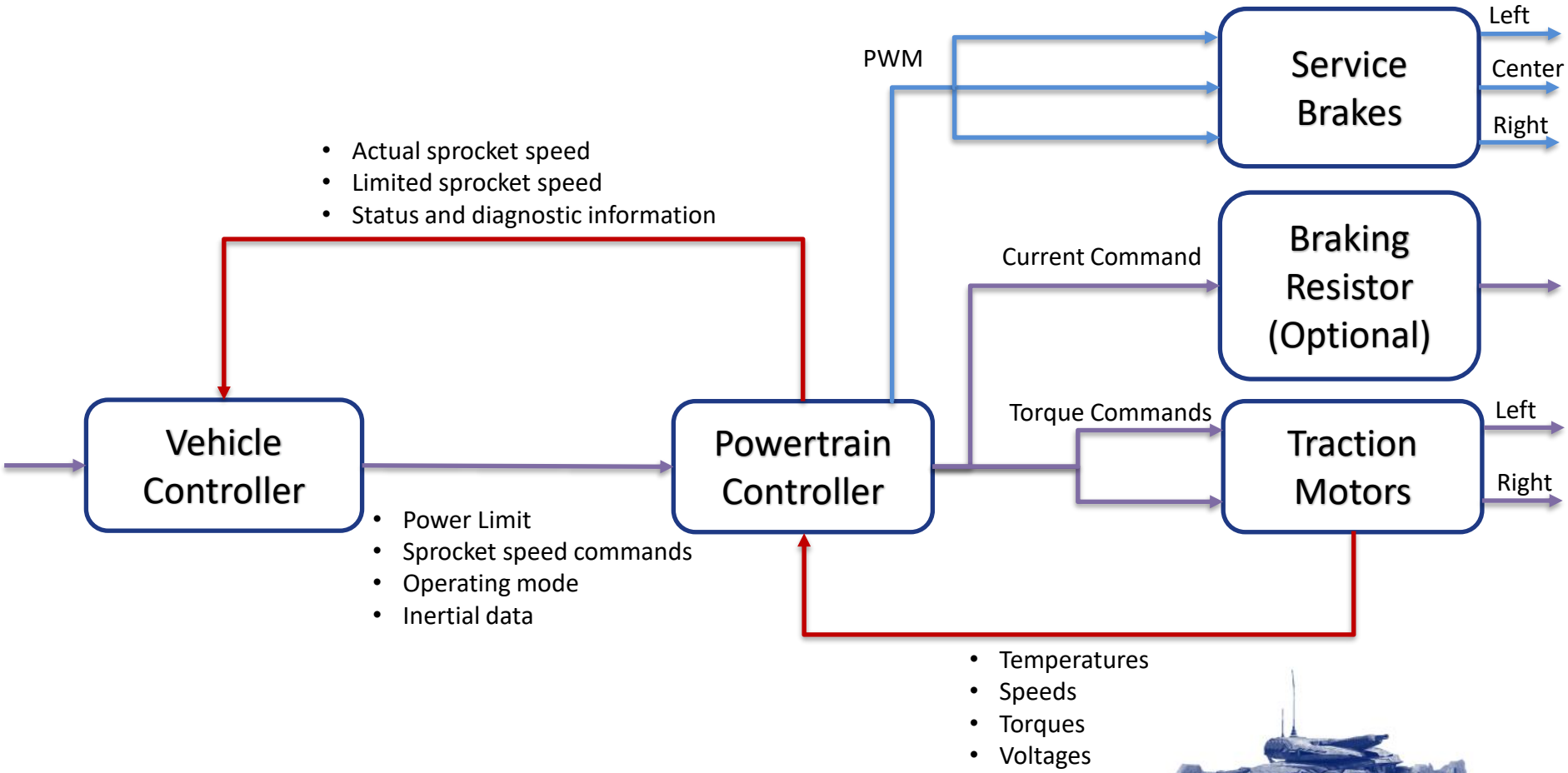

Power Management

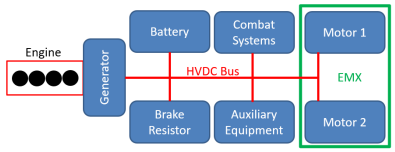

Input Power Limiting

Differential Torque Limiting

Total Torque Limiting

INPUTS

OUTPUTS

InpPwrLimPID

Cmd.BattPwrDchaLim → BattPwrDchaLim
Cmd.BattPwrChrgLim → BattPwrChrgLim
DrvIvtrSnsr → DrvIvtrSnsr
AuxIvtrInp → AuxIvtrInp
MotLims → MotLims
PwrLim → PwrLim

CalcDiffTqLims

PwrLim → PwrLim
OutpTar → OutpTar
ShiftCtrl → ShiftCtrl
MotLims → MotLims
MotDerates → MotDerates
OutpDiffTqTar → OutpDiffTqTar
MotDiffTqLim → MotDiffTqLim
MotDiffTqTar → MotDiffTqTar

MotLimsLookup

ResSig → ResSig
DrvIvtrSnsr → DrvInvSnsr
ResSig → MotLims
DrvIvtrSnsr → MotDerates

MaxTotTqLim

MotDiffTqTar → MotDiffTqTar
PwrLim → PwrLim
ResSig → ResSig
MotLims → MotLims
MotDerates → MotDerates
ShiftCtrl → ShiftCtrl
TotTqLim → TotTqLims

OutpTar → OutpTar
ShiftCtrl → ShiftCtrl
ResSig → ResSig
DrvIvtrSnsr → DrvIvtrSnsr
ShiftCtrl → ShiftCtrl

Motor Input Power vs Speed & Torque

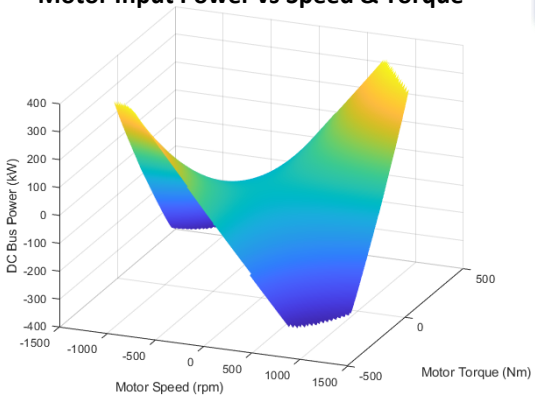

EMX1000 prototype is ideal for a 10-20 tons RCV-M type vehicle:

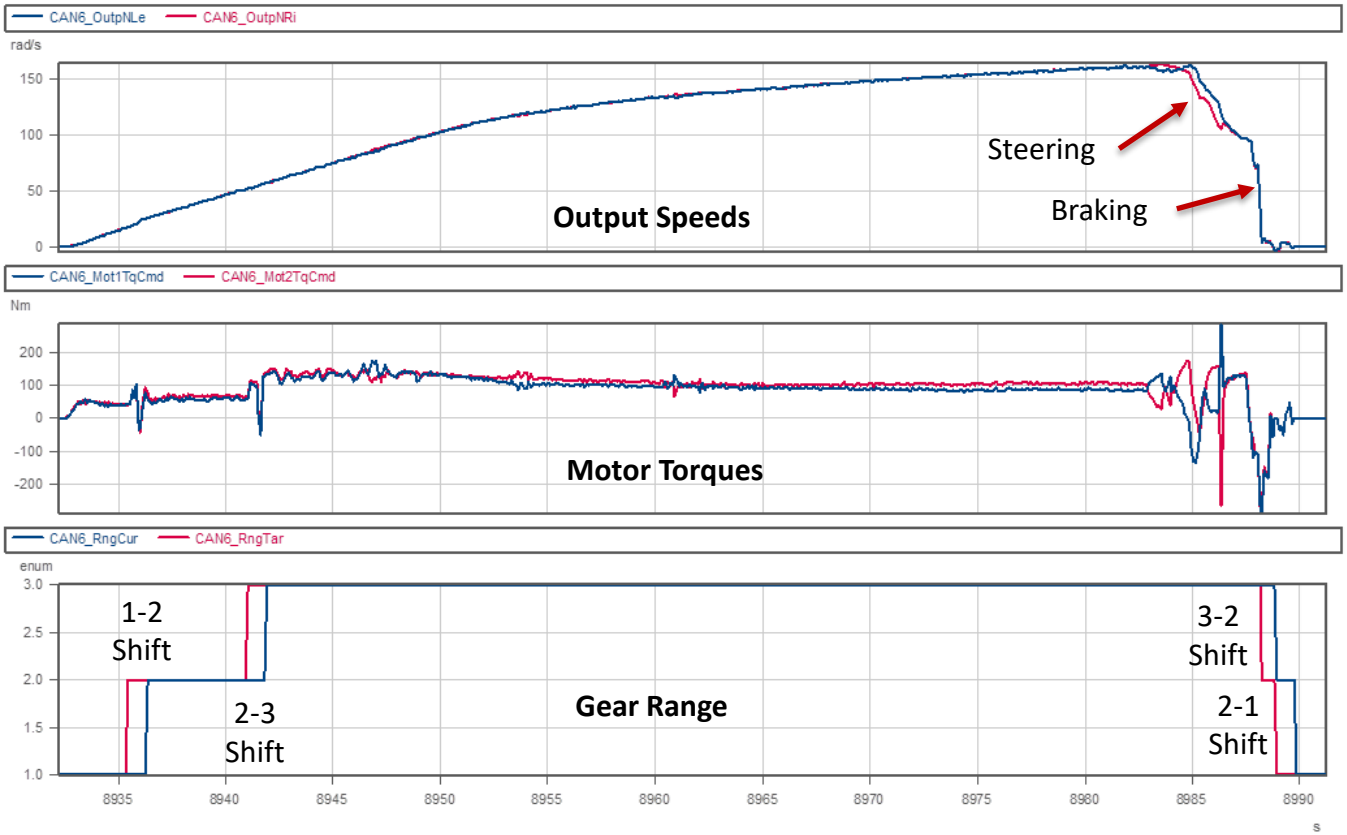

Tractive Effort:

- Continuous: 0.7 x GVW
- Peak: 0.9 x GVW

Top speed >70 km/h

Series Hybrid Drive Benefits

Key benefits of a Series Hybrid for Combat Vehicles:

- Reduced fuel consumption; Increased range
- Increased performance
- Increased vehicle design flexibility
- Electrical power
  - Capable of exporting full engine power
  - Supports high-powered electronics, weapons, combat systems
- Silent Watch
  - Batteries support onboard systems without engine running constantly
- Silent Mobility
  - Short range mobility possible with sufficient battery

Cross Drive Benefits

Key benefits of cross drive steering vs independent gearboxes:

- > 50% reduced size of drive motors and inverters
- Increased efficiency in steering maneuvers
- Fault tolerance: redundancy and fewer points of failure

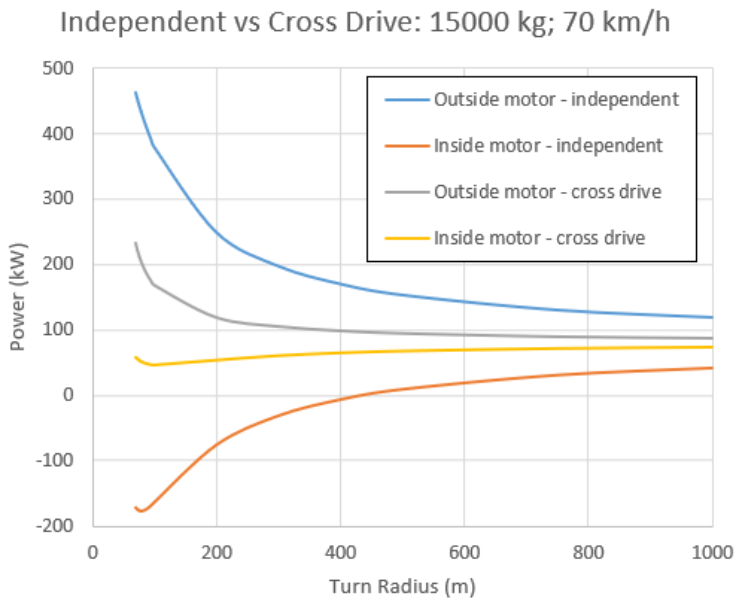

Model Based Development

EMX System is developed using Model Based Design:

- Drivetrain system engineering with model based design
- Torsional Vibration Analysis (TVA)
- Transmission modeling
- Clutch shift modeling
- Lubrication system modeling
- Clutch design
- Transmission loss analysis (spin, paddling, etc)
- Tracked vehicle steering performance
- Brake performance
- Hydraulic pump/motor modeling
- Field data analysis and visualization
- Simulation model verification/validation
- SIL/HIL

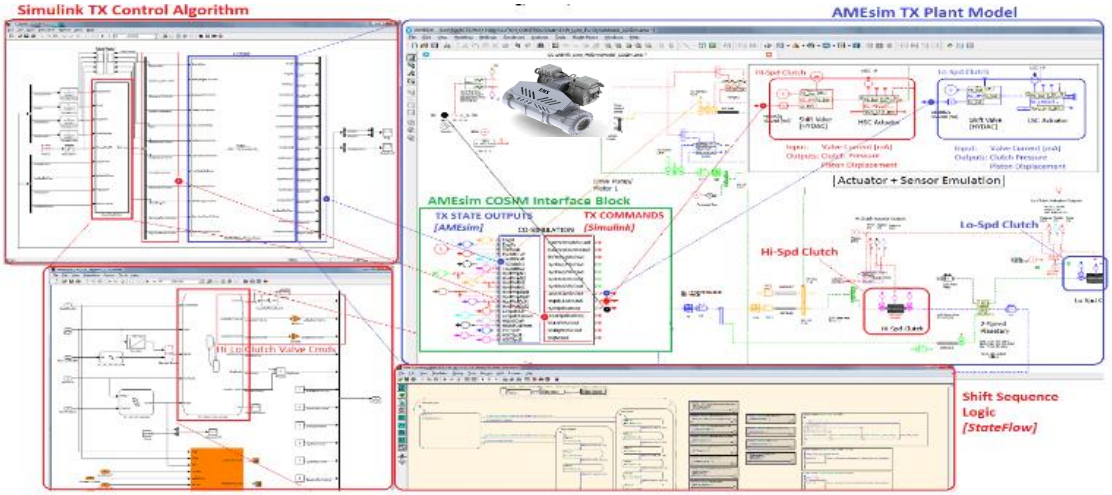

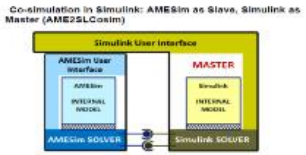

Simulation Tools:

- AMEsim
- Simulink / MATLAB
- Excel (Matlab data I/O)
- Others : CarSim/TruckSim, Symbolic Math, etc

Control Modeling:

- Transmission control
- Electro-hydraulic control
- Automatic Code Generation (AGC)
- Model In Loop (MIL)

EMX Development Status

- The EMX1000 prototype is currently at TRL7, undergoing trials in a customer vehicle.
- Further internal testing and refinement is ongoing, including scaling the design to suit vehicles up to 60+ tons.

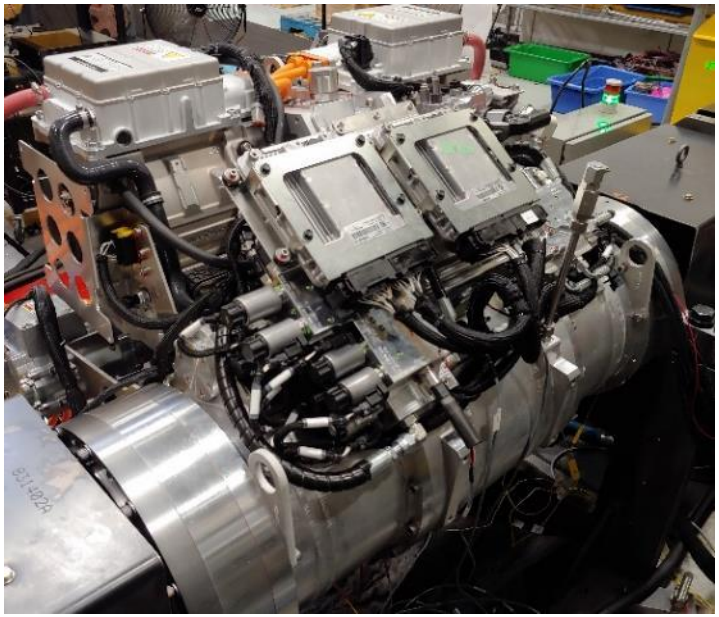

Kinetics Test Facility

- 8,000 Sq. Ft. Facility
- Multiple dynamometers
  - Eddy Current
  - Variable Frequency Drives
- Up to 4,500 HP Capacity